V I N C I & A S S O C I A T E S
Structural Engineers

Professional Solar Products, Inc.
1551 S. Rose Ave.
Oxnard, CA 93033

Subject: Static load test results

Mounting System Specification table	Min Rail Height (in.)	Max span (in.)	Maximum Frame Length* (in.)	Maximum Frame Width* (in.)	Test Load (lbs/ft²)	Equivalent Wind Speed (mph)**
SolarWedge®	2-1/2	72	77	40	45	125
SolarWedge® XD	3	96	77	40	30	110

TEST SETUP (shown in attached drawing detail): Three modules, as specified above, were bolted to Professional Solar Products (PSP) RoofTrac® support rails, as specified above, using an assembly of 5/16" Stainless Steel (SS) bolts, SS lock washers and proprietary aluminum clamps and inserts. The RoofTrac® support rails were attached to the PSP SolarWedge® structural attachments using a proprietary 15° angle bracket support and inner compression nut with a 3/8"x 4" SS all-thread,3/8" SS jam nuts, and 3/8" SS washers. The SolarWedge® bases were attached to Commercial FastJack® E-Series attachment for additional roof clearance. The attachment spans consisted of 48" front to rear with structural attachments spaced as specified above . The entire set up was attached to 4"x8" beams using 3/8"x5" lag bolts. The test set up rested on a concrete floor.

TEST PROCEDURE (as shown in attached drawing detail): The test set up was top loaded using concrete ballasts as specified in table. The setup remained loaded for an approximate period of 30 minutes. The maximum deflection and any signs of permanent deformation were recorded. The test setup was then inverted and loaded to simulate the uplift condition. The test set up was re-loaded as specified in table. The setup remained loaded for an approximate period of 30 minutes. The maximum deflection and any signs of permanent deformation were recorded.

TEST RESULTS:
The 2-1/2" rail maximum 72" span top load deflection was recorded at 0.563", with no permanent deformation.
The 2-1/2" rail maximum 72" span uplift deflection was recorded at 0.656", with no permanent deformation.
The 3" rail maximum 96" span top load deflection was recorded at 0.563", with no permanent deformation.
The 3" rail maximum 96" span uplift deflection was recorded at 0.875", with no permanent deformation.

This document certifies the 5°, 10°, 15° SolarWedge®XD mounting systems as specified above, withstand the specified loads equivalent to the above listed wind speeds. The mounting unit performed as expected.

Sincerely,

James R. Vinci, S.E.

This engineering report verifies that Vinci & Associates has provided independent observation for load testing as described in this report. The results of this load test reflect actual deflection values and are generally accepted as the industry standard for testing module mounting systems. Vinci & Associates does not field check installations or verify that the mounting system is installed as described in this engineering report.

Any rail splice used shall be manufactured by PSP. Limit spliced rail run to approx. 45 ft.

Structural attachment: Lag bolt attachment should be installed using the proper pilot hole for optimum strength. A 3/8" lag bolt requires a 1/4" pilot hole. It is the responsibility of the installer to insure a proper attachment is made to the structural member of the roof. Failure to securely attach to the roof structure may result in damage to equipment, personal injury or property damage.

This office does not express an opinion as to the load bearing characteristics of the structure the mounting system/modules are being installed on.

Check with local building department or AHJ for site specific requirements.
*Modules measuring within stated specifications and tested to UL1703, or equivalent, are included in this engineering.
**Using wind load exposure and gust factor coefficient "exposure C" (5/12 roof pitch or less) as defined in the 2012 (IBC) / 2013(CBC) /ASCE 7-10.

REGISTERED PROFESSIONAL ENGINEER
JAMES RICHARD VINCI
No. S4411
Exp. 12/31/17
STRUCTURAL
STATE OF CALIFORNIA

175 E. Wilbur Road, Suite 103 • Thousand Oaks, CA 91360

TOP VIEW

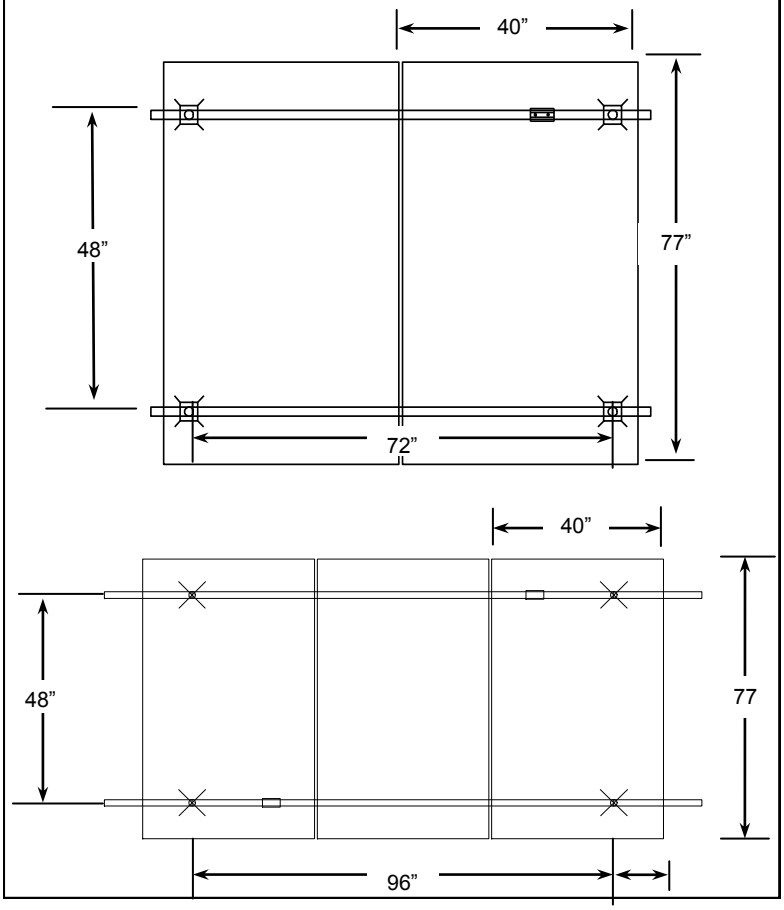

REAR VIEW

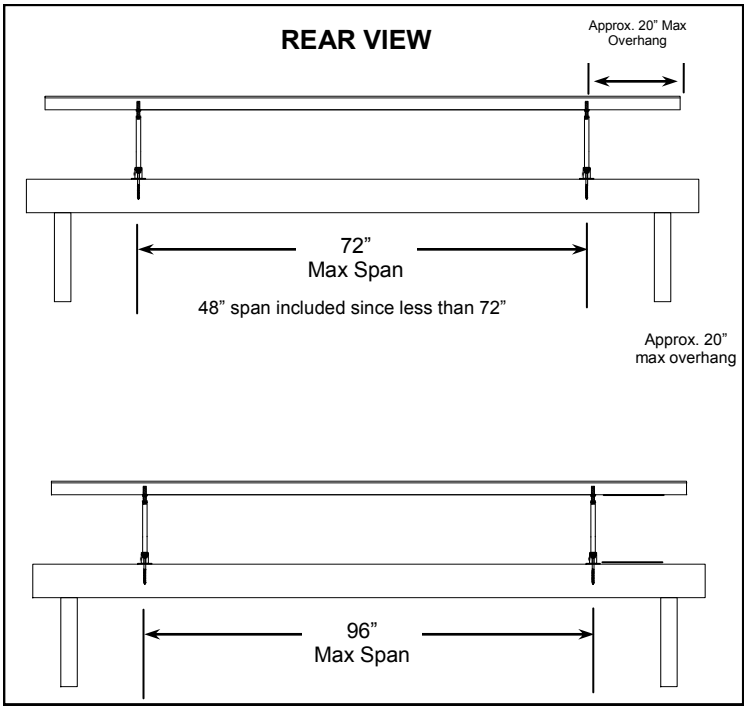

TEST SETUP—SIDE VIEW

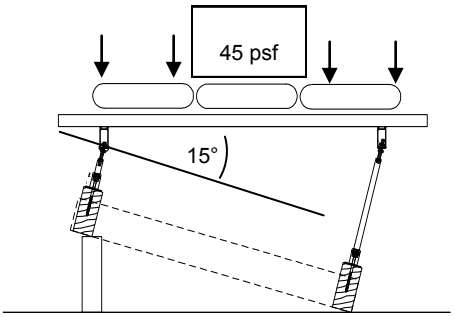

TOP LOAD DEFLECTION 0.563”

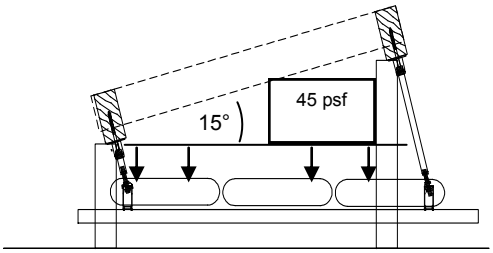

UP LIFT DEFLECTION: 0.656”

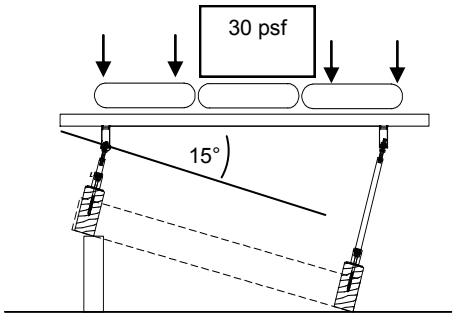

TOP LOAD DEFLECTION 0.813”

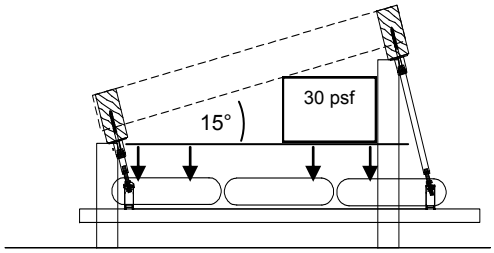

UP LIFT DEFLECTION: 0.875”

SolarWedge®
Professional Solar Products Patent# 6,360,491
Photovoltaic mounting system

SolarWedge®
Solar modules
Static load test illustration

SW

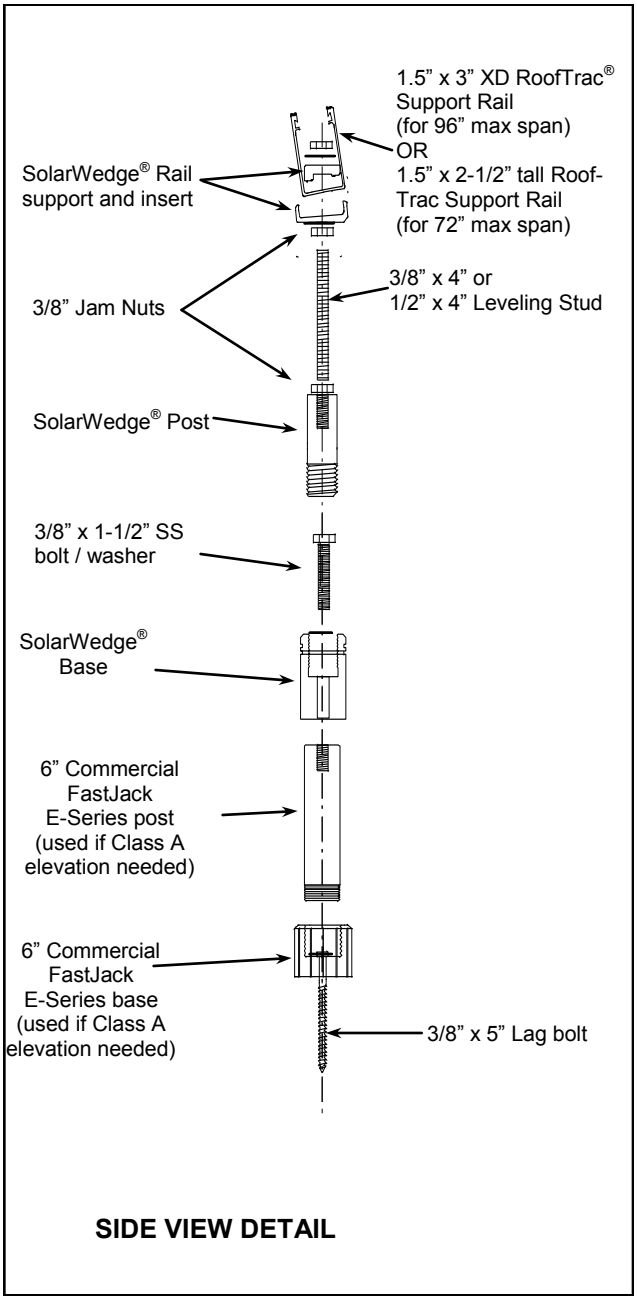

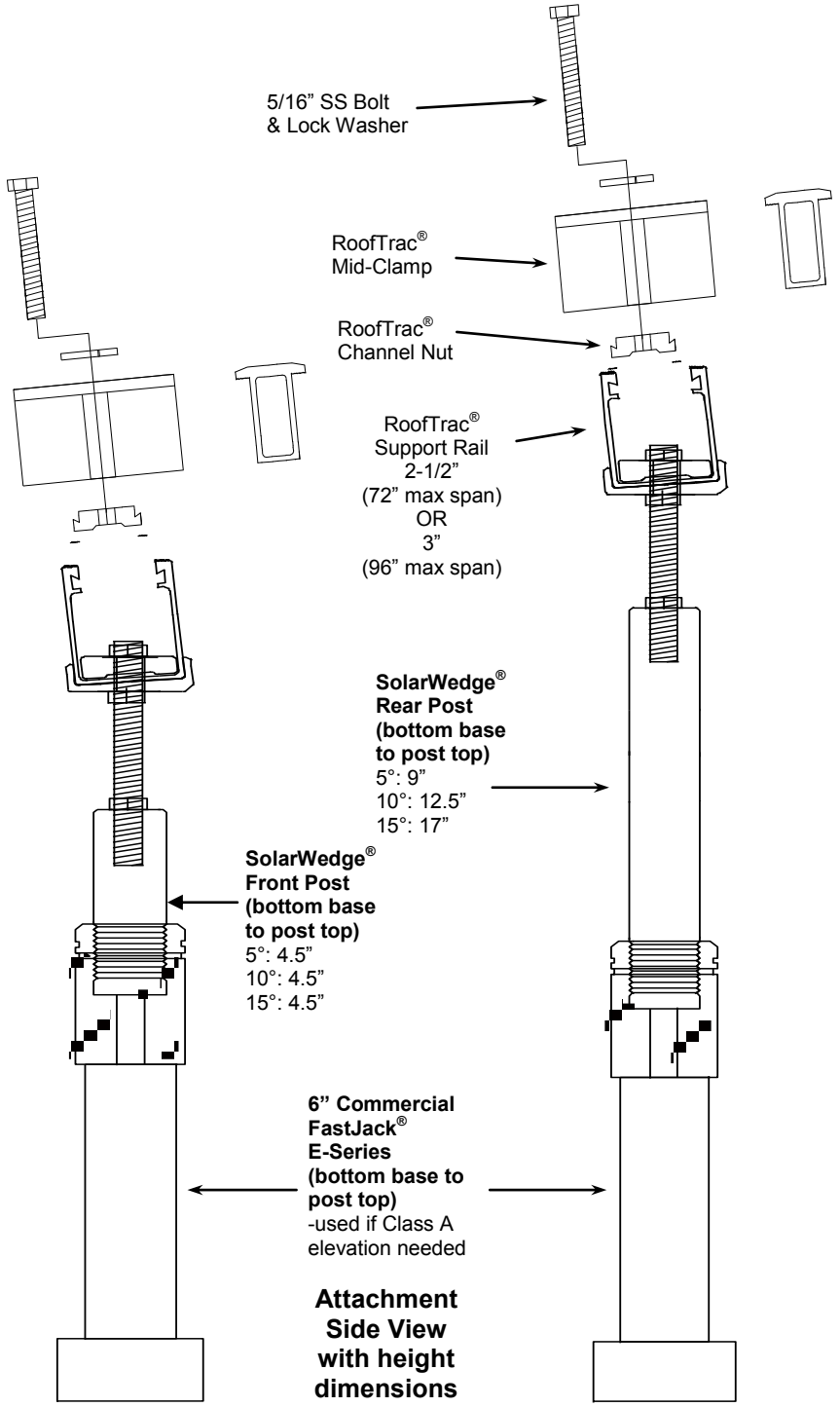

SolarWedge®
Professional Solar Products Patent# 6,360,491
Photovoltaic mounting system

SolarWedge®
Solar modules
Static load test illustration

SW